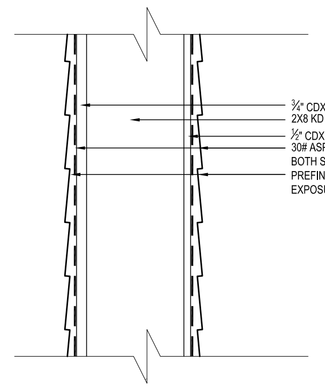

B

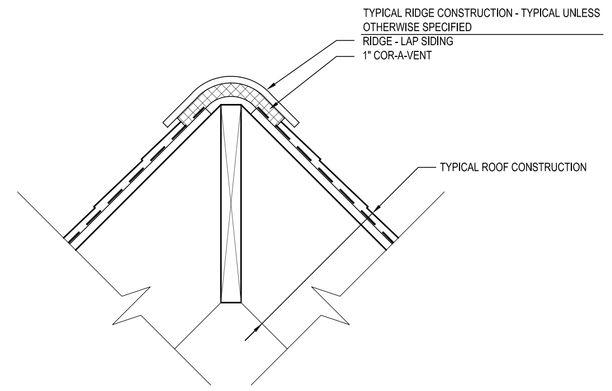

R

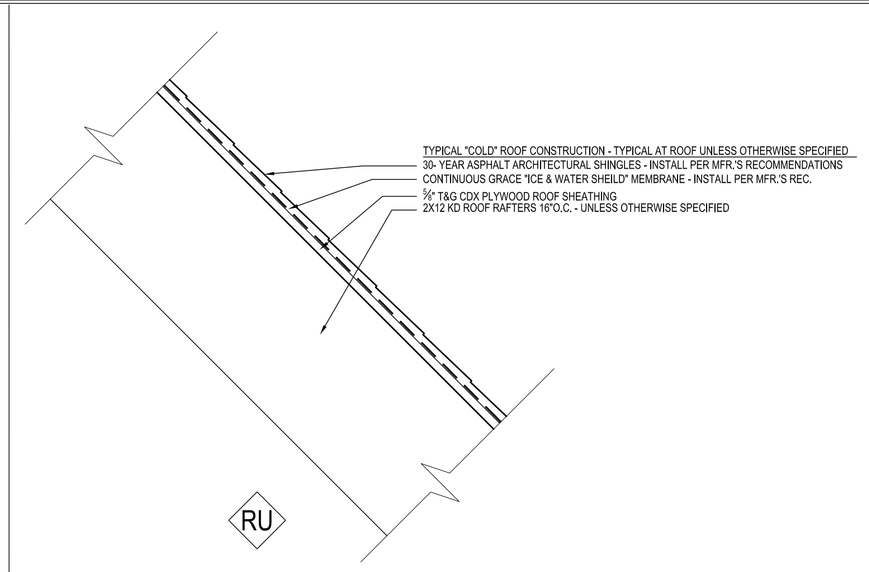

RU

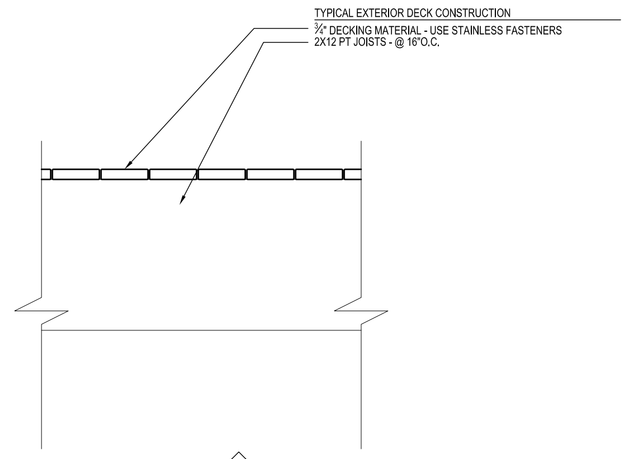

D1

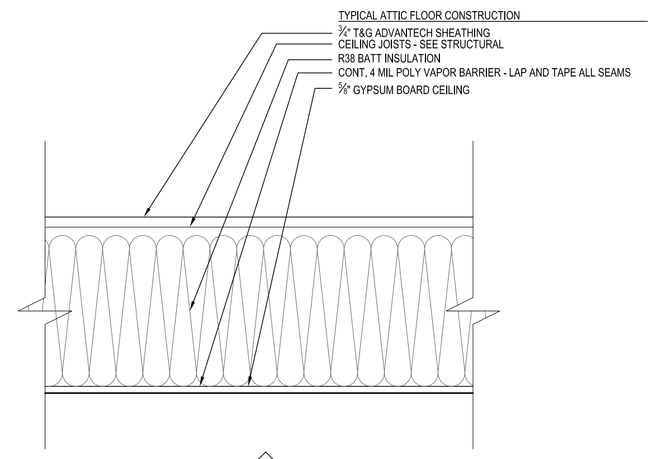

C1

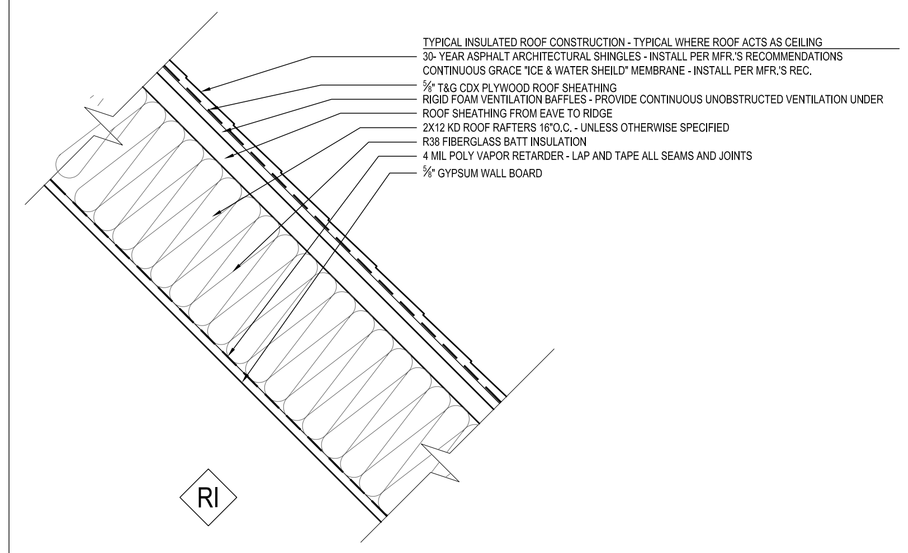

RI

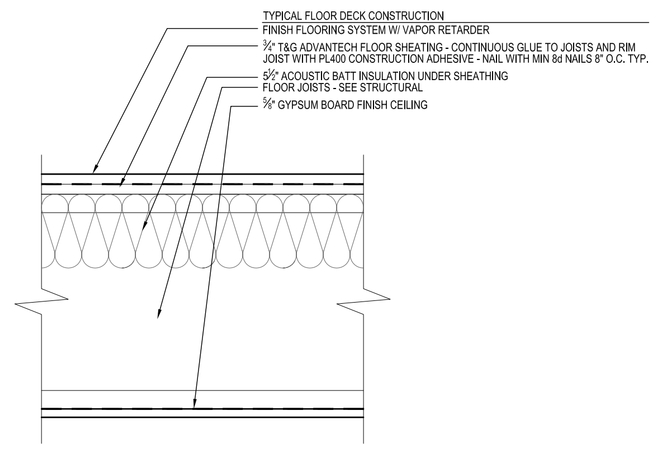

RI

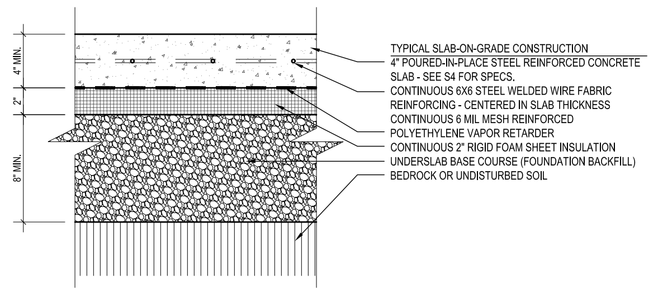

SF

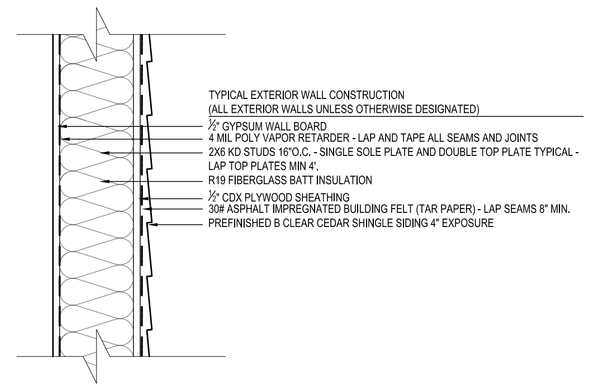

A

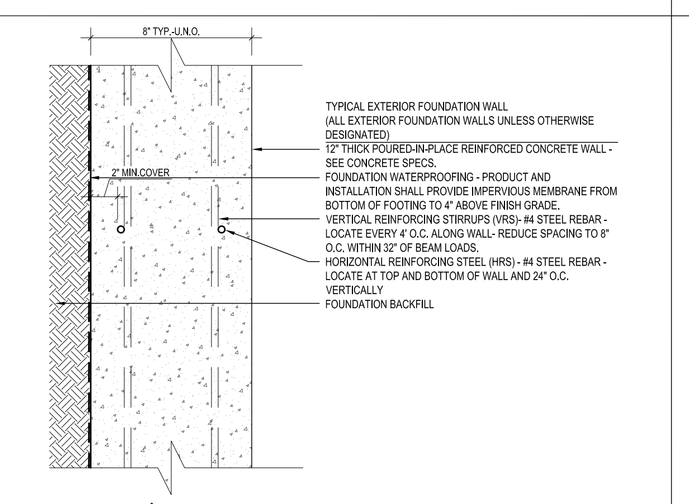

SW

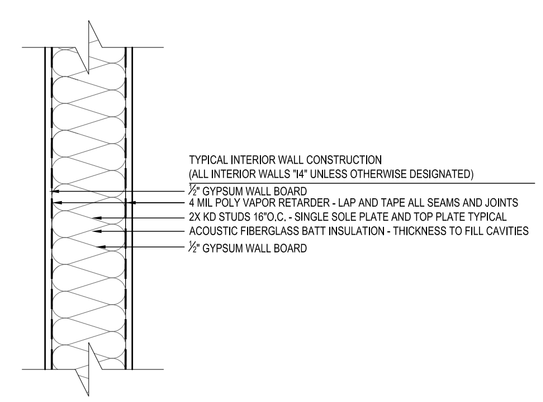

I4 2X4 STUDS

I6 2X6 STUDS

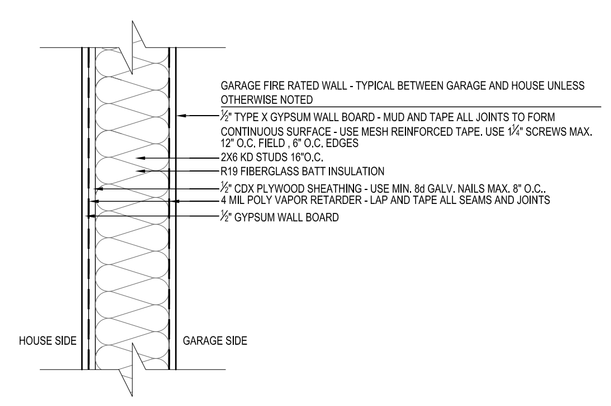

F

CONSTRUCTION / PERMIT SET

REVISIONS	DATE

PROJECT NORTH

PROPOSED ADDITIONS TO THE:
MACDONALD RESIDENCE
CARIBOU ROAD PORTLAND, MAINE

D'ANGELO ASSOCIATES
ARCHITECTURE + LANDSCAPES
P.O.B. 1480 / 65 ELLSWORTH ROAD
BLUE HILL, ME 04614
207.374.5940

CONSTRUCTION ASSEMBLY TYPES

DATE: 08.12.09
SCALE: AS NOTED
DRAWN: NJD
CHECKED: NJD

G2